CLEAN architecture

Paolo Burgio
paolo.burgio@unimore.it

UNIMORE
UNIVERSITÀ DEGLI STUDI DI
MODENA E REGGIO EMILIA
High Performance
Real Time Lab

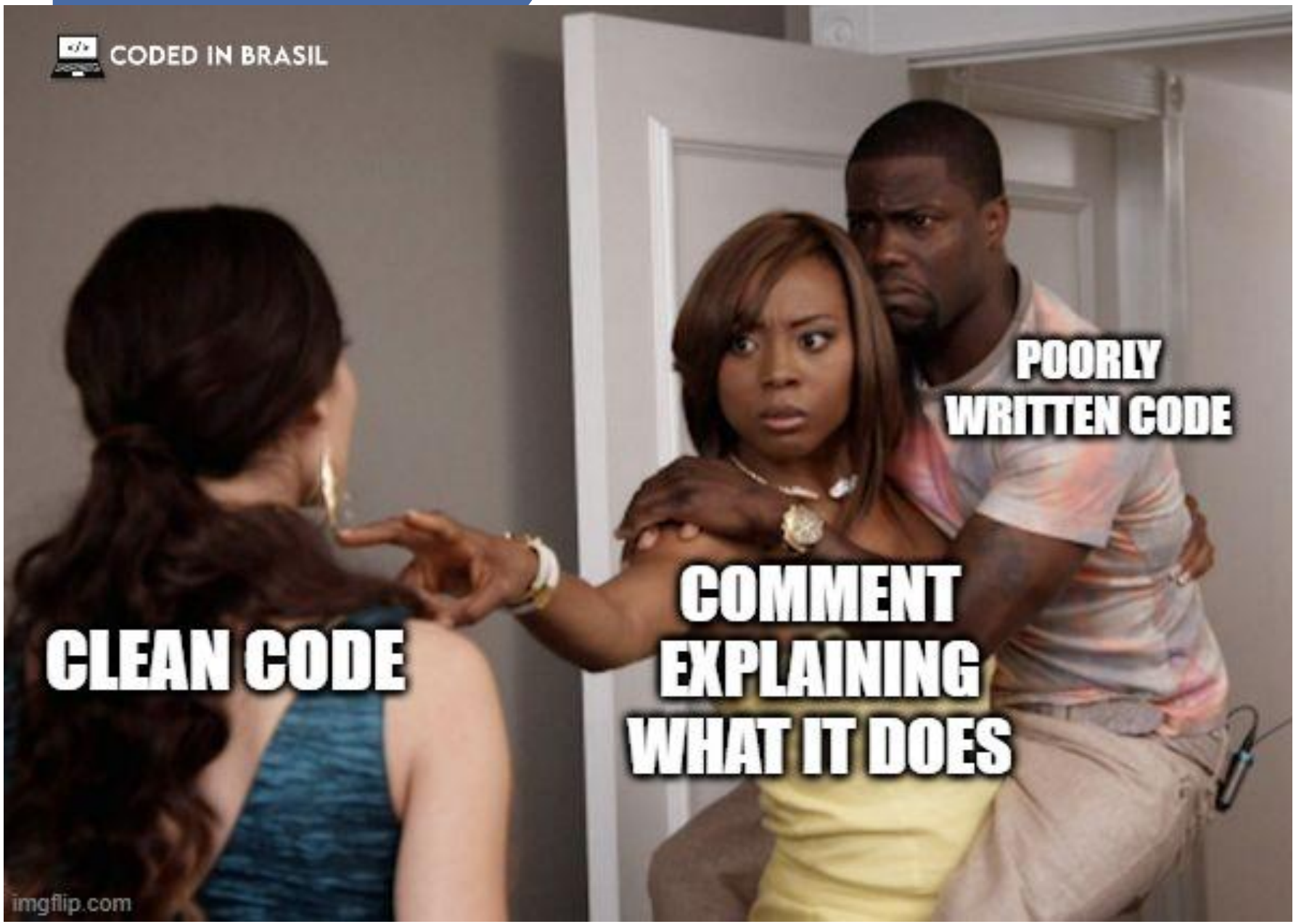
CODED IN BRASIL
CLEAN CODE
COMMENT EXPLAINING WHAT IT DOES
POORLY WRITTEN CODE
imgflip.com

What is it?

A code architectural pattern

- A structure that enables building software that is more scalable, testable, maintainable
- Built upon/heavily relies on good coding practices (e.g., SOLID, design patterns..)
- Disclaimer: +15-20% dev time overhead

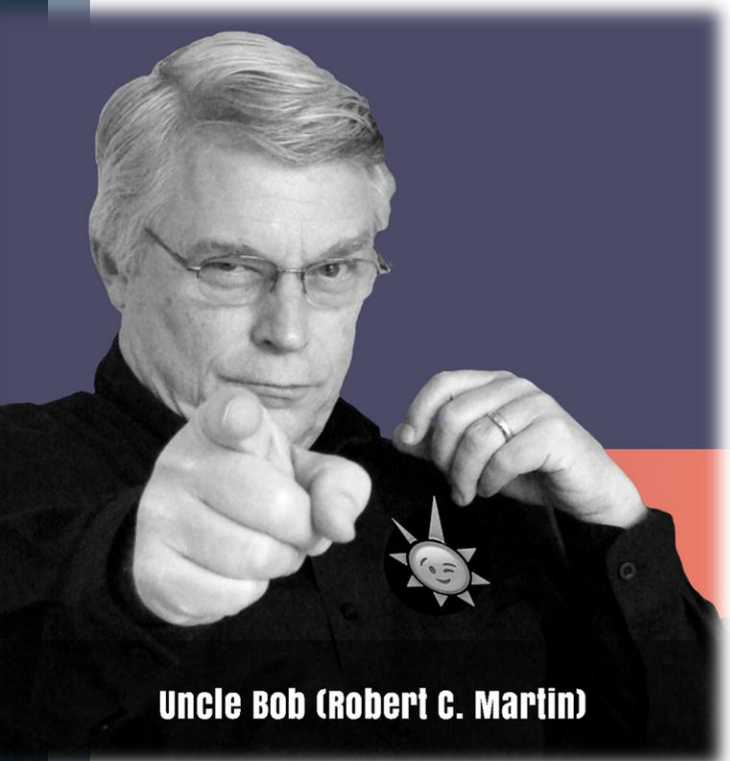

- Formalized by "Uncle Bob"
- Started his blog in 2011
- Adopted by nearly all mid- and large-scale projects

As simple as this

› Aka: "Onion Architecture"

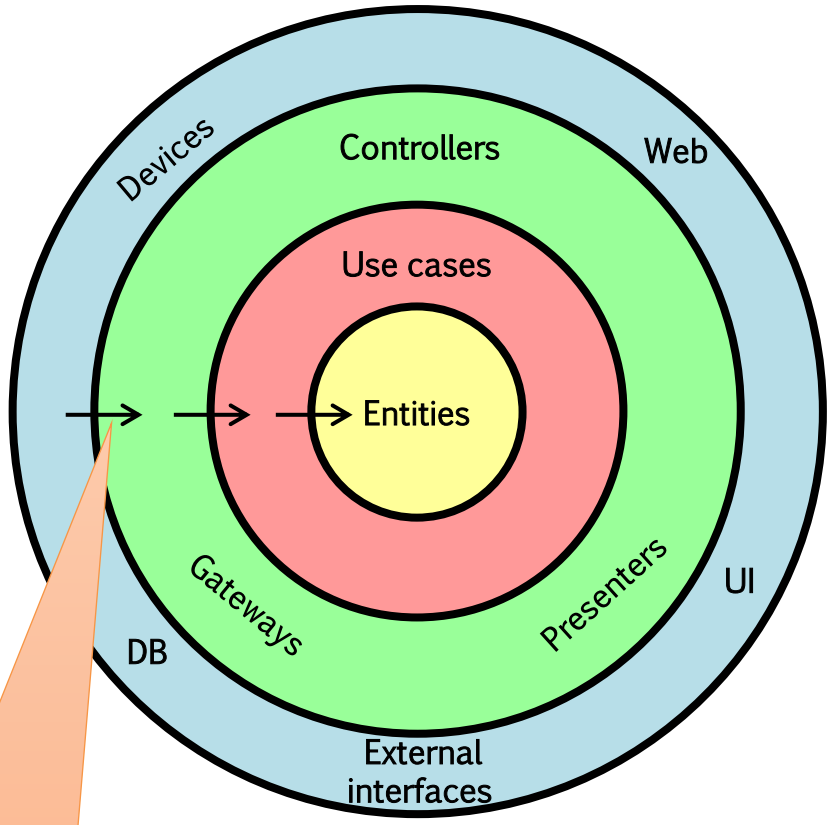

Enterprise business rule

Application business rule

Interface Adapters

Frameworks & Drivers

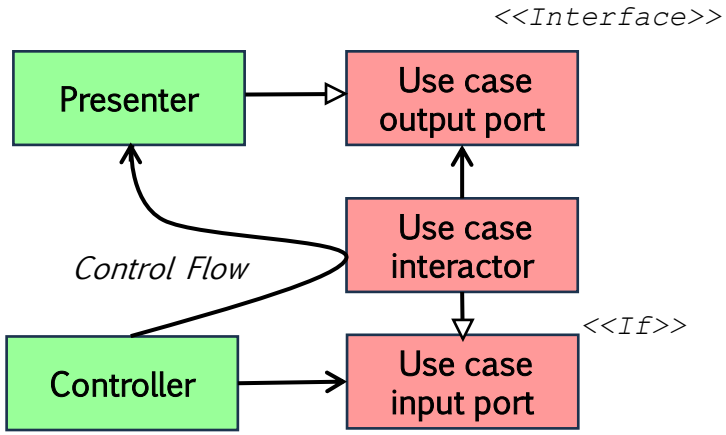

Dependencies go from "out" to "in"

The Model

- Our view of the world: just field, and basic operations (get, set..)

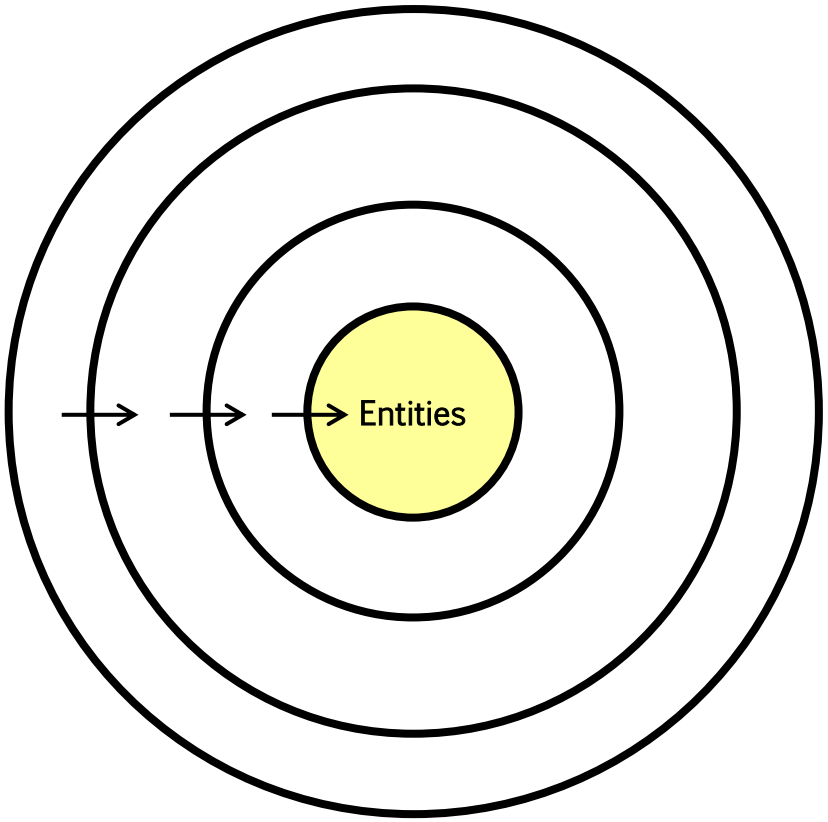

Enterprise business rule

- Everything depends on them/includes them, they do not depend on anything
- Why is this so important?

Dependency Inversion

- Reduce coupling
  - Avoids unnecessary dependencies that ultimately make the code hard to modify
- Enables fast testing and debugging
- Wraps functionalities (Interface Segregation)

(Only one issue)

- You need to find a (elegant) way to provide the required services
- Dependency Injection!

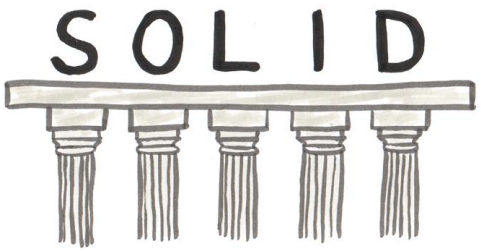

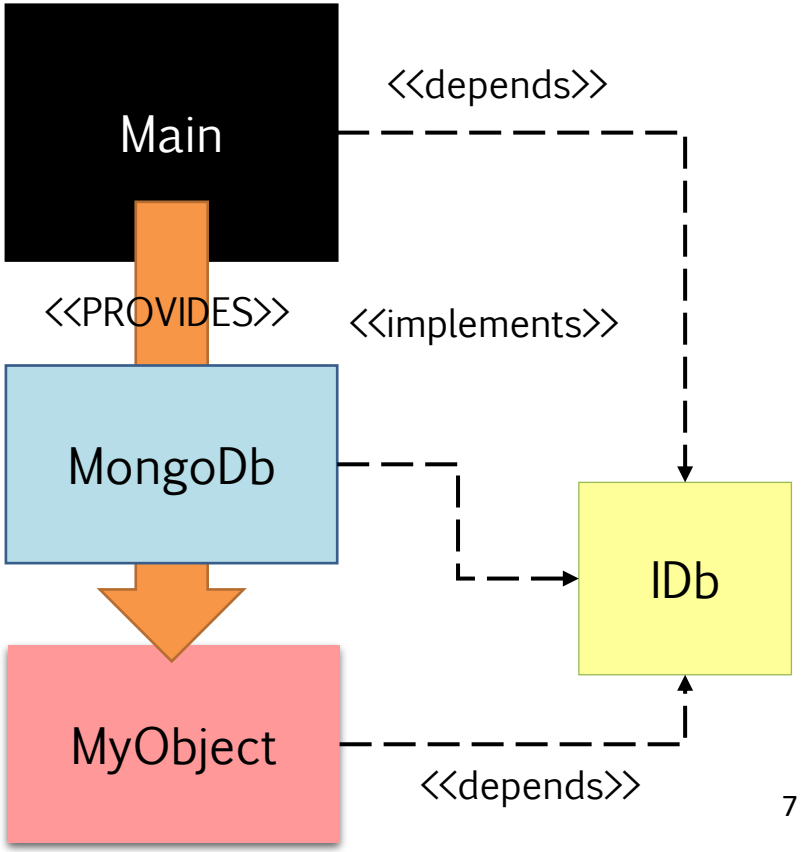

Straight from requirements

› Application specific logics: functionalities

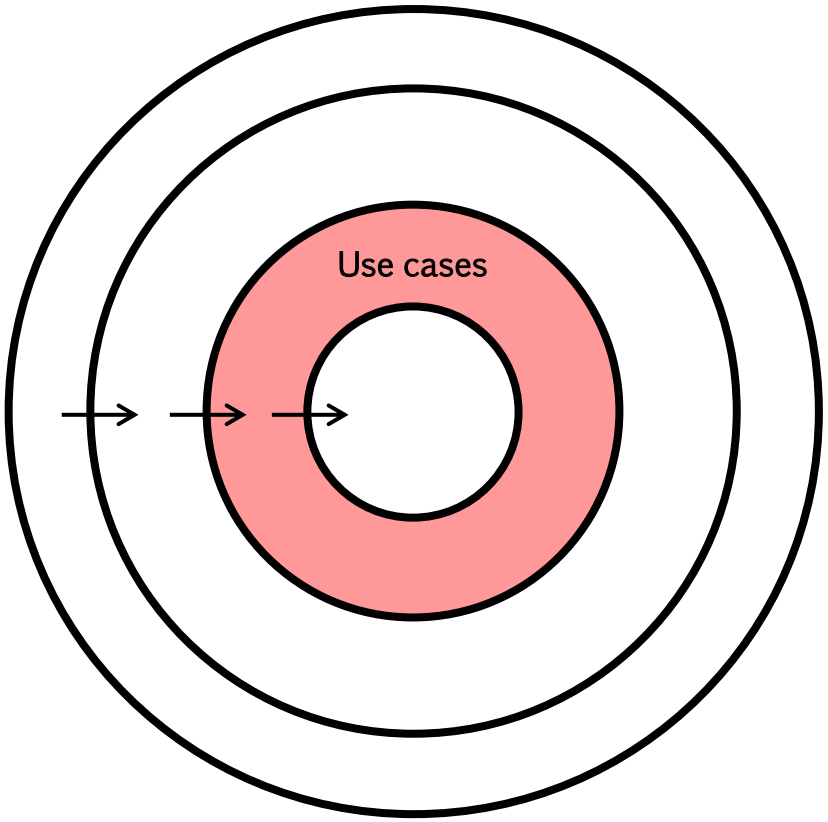

Application business rule

"The bad world"

- This layer represents, and wraps, "external" dependencies, e.g., DTOs, MongoDb…

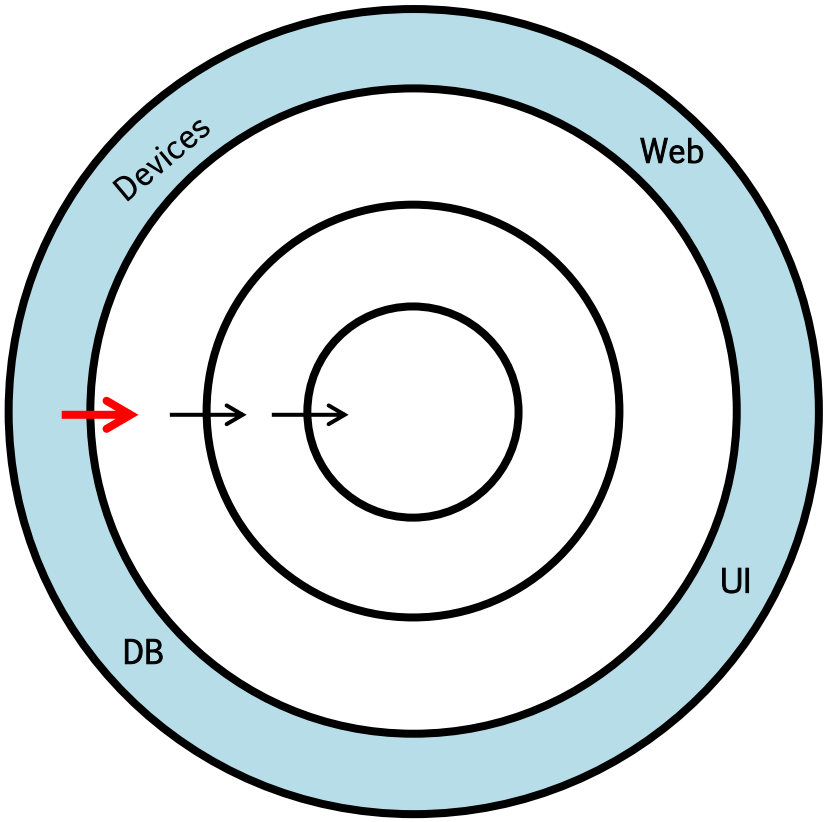

Frameworks & Drivers

- How do we implement the dependency?

Our good old friend

- Aka: "Onion Architecture"

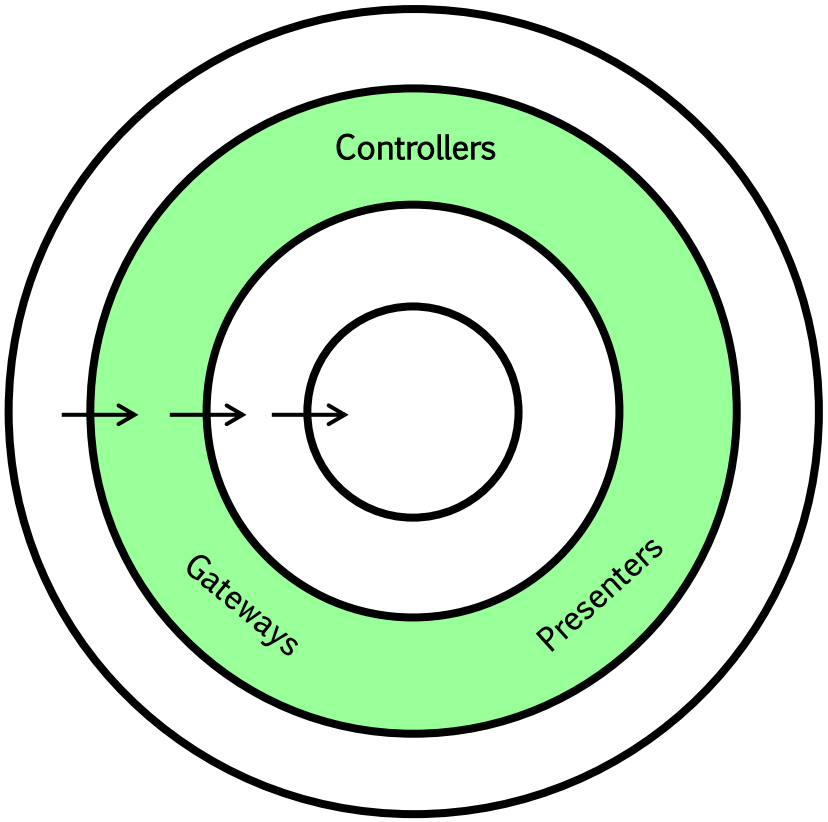

Interface Adapters

Control flow, and class diagram

› Note how we use Interfaces, and (consequently) Dependency Injection

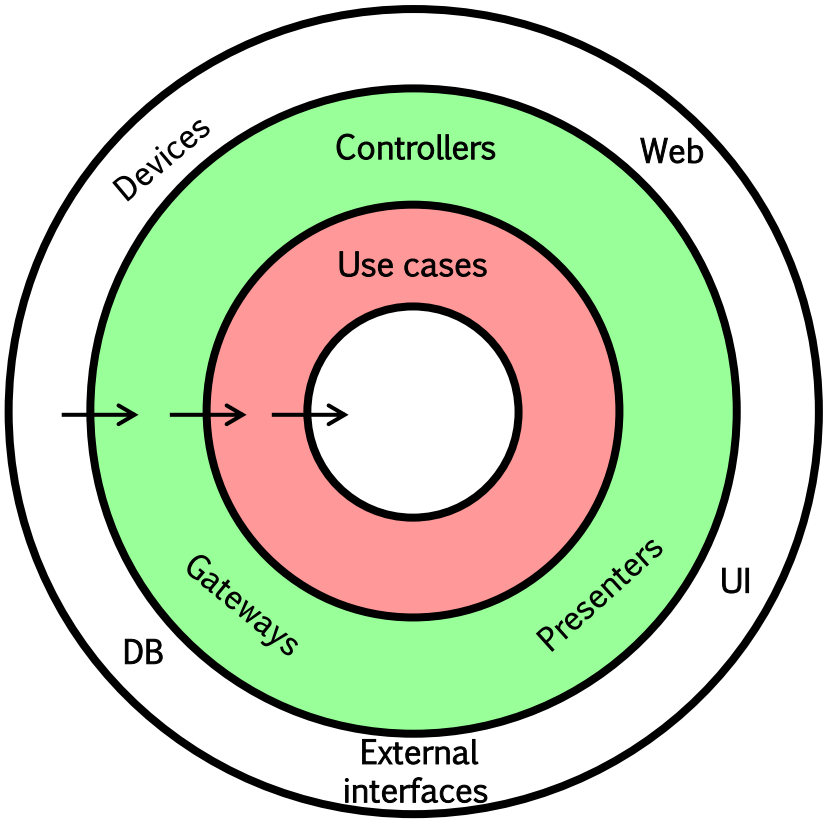

Application business rule

Interface Adapters

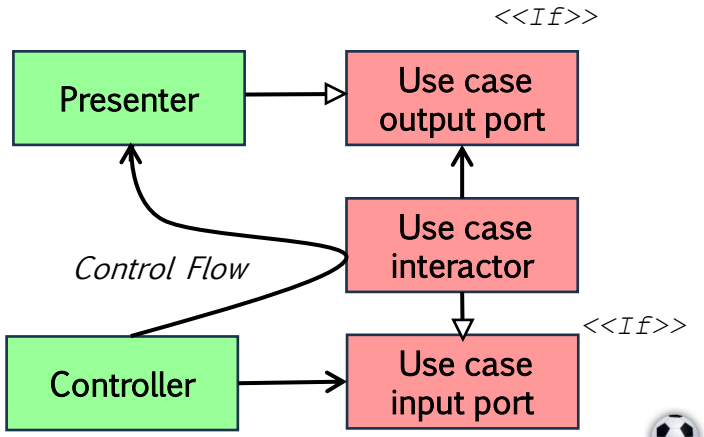

Dependency Injection in Java

Java does not natively support DI

- Use external FWK, such as *Spring* or Google Guice
- Typically, based on annotations
- `@AutoWired` tells Spring to search for a Spring bean that implements the `IWriter` interface and place it automatically into the setter.

```
@Service
public class MySpringBeanWithDependency {
  private IWriter writer;

  @Autowired
  public void setWriter(IWriter writer) {
    this.writer = writer;
  }

  public void run() {
    String s = "This is my test"; writer.writer(s);
  }
}
```

Dependency Injection in Java

- `@Service` tells Spring this is something that implements business logic, and we can inject it

```
public interface Iwriter  {
  void writer (String s);
}
```

```
@Service
public class MyWriter implements IWriter {
  @Override
  public void writer (String s){
    System.out.println("The string is " + s);
  }
}
```

Dependency Injection in Java

- Also `MySpringBeanWithDependency` implements `@Service` ...of course

```
@Service
public class MySpringBeanWithDependency {
  private IWriter _writer;

  @Autowired
  public void setWriter(IWriter writer) {
    this._writer = writer;
  }

  public void run() {
    String s = "This is my test";
    this._writer.writer(s);
  }
}
```

Spring annotations

Basically, every class you saw before was a Java Bean

- You could use the "generic" `@Bean` annotation
- Used for Classpath Scanning
- In C# it's called Reflection, but it's basically the same principle

We can even be more precise, specifying

- `@Component`, a generic Spring-managed component.
- `@Service`, which we saw, annotates classes at the business logic/services layer
- `@Repository` annotates classes at the persistence layer, i.e., (database) repositories

Dependency Injection with Guice

Lightweight interface

- Still, need to include some JARS, as it's part of a framework
- Here, `.classpath` file for Eclipse

```
<?xml version="1.0" encoding="UTF-8"?>
<classpath>

  <classpathentry kind="src" path="src"/>
  <classpathentry kind="con" path="org.eclipse.jdt.launching.JRE_CONTAINER">
    <attributes><attribute name="module" value="true"/> </attributes>
  </classpathentry>

  <classpathentry kind="lib" path="lib/aopalliance-1.0.jar"/>
  <classpathentry kind="lib" path="lib/failureaccess-1.0.3.jar"/>
  <classpathentry kind="lib" path="lib/guava-33.4.8-jre.jar"/>
  <classpathentry kind="lib" path="lib/guice-6.0.0.jar"/>
  <classpathentry kind="lib" path="lib/jakarta.inject-api-2.0.1.jar"/>
  <classpathentry kind="lib" path="lib/javax.inject-1.jar"/>

  <classpathentry kind="output" path="bin"/>

</classpath>
```

Dependency Injection with Guice

- Depencency Interface and concrete implementation won't change
- Note the absence of Annotations wrt Spring

```
public interface Iwriter  {
  void writer (String s);
}
```

```
public class MyWriter implements IWriter {
  @Override
  public void writer (String s){
    System.out.println("The string is " + s);
  }
}
```

Dependency Injection with Guice

- `ServiceConsumer` ctor is annotated with `@Inject` ...of course

```
public class ServiceConsumer implements IServiceConsumer {
  private IWriter _writer;

  @Inject
  public void ServiceConsumer(IWriter writer) {
    this._writer = writer;
  }

  public void run() {
    String s = "This is my test";
    this._writer.writer(s);
  }
}
```

Dependency Injection with Guice

- `ServiceConsumer` setter is annotated with `@Inject` ...of course

```
public class ServiceConsumer implements IServiceConsumer {
  private IWriter _writer;

  @Inject
  public void setWriter(IWriter writer) {
    this._writer = writer;
  }

  public void run() {
    String s = "This is my test";
    this._writer.writer(s);
  }
}
```

Dependency Injection with Guice

`ConfiguratorModule` has the responsibility of resolving the dependencies

- Inherits from `com.google.inject.AbstractModule` components
- Explictly invoked through the `Injector` helper class

```
public class ConfiguratorModule extends AbstractModule {
  @Override protected void configure() {
    bind(IWriter.class).to(MyWriter.class);
  }
}
```

```
public static void main(String[] args) {

  Injector injector = Guice.createInjector(new ConfiguratorModule());
  IService svcConsumer =
    injector.getInstance(ServiceConsumer.class);

  svcConsumer.run();
}
```

Ctor-based vs. setter-based injection

"Rule of thumb"

- Use constructors for mandatory dependencies
- Use setters methods or configuration methods for optional dependencies

```
public class ServiceConsumer implements IServiceConsumer {
  private IWriter _writer;

 @Inject
  public void ServiceConsumer(IWriter writer) {
    this._writer = writer;
  }

  @Inject
  public void setWriter(IWriter writer) {
    this._writer = writer;
  }

  //...
}
```

Exercise (Java)

Let's code!

Take the basic WebSvc example

...or...

Take any application (the simpler, the better)

...and refactor it following CLEAN architecture

- Certainly, dependency injection with Guice
- Try to isolate Entities, analyzing the problem

Dependency Injection in dotNet

Example: WebApp

- We build and run the actual program, explicitly, in `Program.cs`
- `WebApplicationBuilder` is the class that performs (Web)Application startup
- It has features to inject services

```
// 'Transient' means that you create a new instance every time
// it is injected
builder.Services.AddTransient<IService, ConcreteImplementation>();

// Scoped' services are created only once for every HTTP request
// we are serving (hence, useful for keeping states within a request
builder.Services.AddScoped<IService, ConcreteImplementation>();

// ...
builder.Services.AddSingleton<IService, ConcreteImplementation>();
```

Exercise (C#)

Let's code!

Take any "basic" application, and refactor it following the clean architecture

..or…

Refactor the basic example of C# WebApi

```
$ dotnet new webapi --use-controllers [-o MySvc]
```

Use dependency injection with builder.Services.Add in "

```
builder.Services.AddScoped<IService, ConcreteImplementation>();
```

Remember to create a basic UML scheme for its structure, to identify the four layers

› Bonus: check `AutoMapper`

References

Course website

- http://hipert.unimore.it/people/paolob/pub/ProgSW/index.html

Uncle Bob

- https://blog.cleancoder.com/uncle-bob/2011/11/22/Clean-Architecture.html

My contacts

- paolo.burgio@unimore.it
- http://hipert.mat.unimore.it/people/paolob/